Losonnante

DATASHEET

Vibe Speaker

Flush-mounted bone-conduction speaker

Ref. VB-SP · Vibe range

Rev. 1.0 · November 2026

The Vibe Speaker is the bone-conduction speaker of the Vibe range. Flush-mounted in a wall or a piece of furniture, it transmits sound through a vibrating pad on which the visitor rests an elbow. Being passive, it connects to the Vibe Player with the supplied 3.5 mm 4-pole (TRRS) jack cable, not a simple stereo jack cable.



KEY FEATURES

- One-elbow bone-conduction listening
- Sound triggered by pressing the pad
- Passive: connected to the Vibe Player by the supplied 4-pole (TRRS) jack cable
- Ø 110 mm flush mounting, 3 swivel clamps
- White Corian faceplate, silicone pad and 7 pins

Applications: museums and cultural venues, leisure parks, festivals and events, tourist sites, urban furniture.

DIMENSIONS

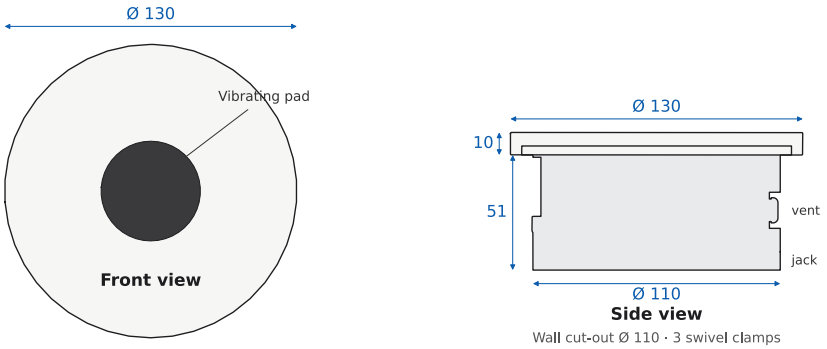

Wall cut-out Ø 110 · 3 swivel clamps

Dimensions in mm

CONNECTIONS	
Audio	3.5 mm 4-pole female jack
Compatibility	Vibe Player, OUT L / OUT R outputs

COMPLIANCE	
Marking	WEEE · made in France
Use	Passive accessory of the Vibe Player

MECHANICAL	
Dimensions	Ø 130 × 61 mm (faceplate Ø 130 × 10 mm)
Weight	≈ 0.65 kg
Recessed body	Ø 110 mm, 51 mm deep behind the faceplate
Wall cut-out	Ø 110 mm
Wall thickness	5 to 25 mm
Mounting	3 swivel clamps tightened from the front, no screws into the wall
Faceplate	Machined white Corian, wave relief
Housing	Black PLA
Enclosure	Machined 6061 aluminium

ENVIRONMENT	
Use	Indoor, protected from humidity and dew
Operating temperature	−20 °C to +55 °C
Sealing	Silicone O-ring, breathable vent

AUDIO	
Principle	Bone conduction, one-elbow listening
Transducer	1 exciter Ø 51 mm, 4 Ω, 10 W
Frequency range	50 Hz to 5 kHz
Pad	Black silicone, 7 pins
Trigger	Pressure sensor: sound plays while pressed (handled by the Vibe Player)

ELECTRICAL	
Type	Passive, no power supply
Connection	3.5 mm 4-pole (TRRS) jack, to a Vibe Player output
Supplied cable	3.5 mm 4-pole (TRRS) jack, male / male, 1 m
Important	4-pole (TRRS) cable required: a 3-pole stereo jack cable does not carry the pressure sensor