Losonnante

DATASHEET

# Whisper AI

Bone-conduction voice dialogue station

Ref. WH-AI · Whisper range

Rev. 1.0 · November 2026

The Whisper AI lets visitors talk out loud with an artificial intelligence restricted to the venue's content. The answer is read by a synthetic voice, through bone conduction.



## KEY FEATURES

- Voice dialogue with an AI, answer through bone conduction
- Built-in microphone, listens only while pressed
- 4G via USB dongle or RJ45 port
- No voice data stored (GDPR)
- 24/7 unattended operation

**Applications:** museums and cultural venues, leisure parks, festivals and events, tourist sites, urban furniture.

## DIMENSIONS

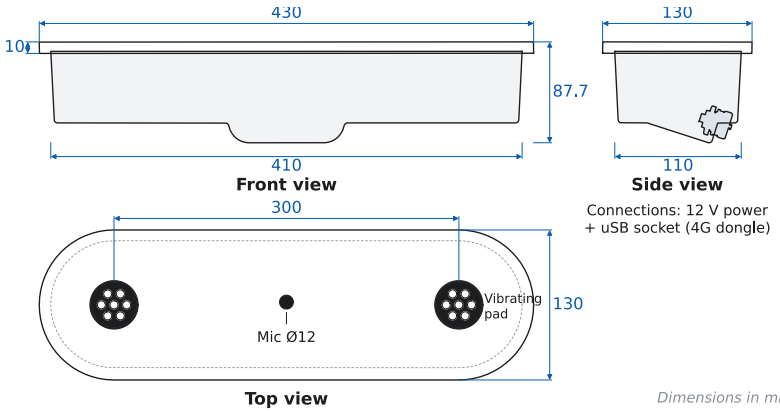


*Dimensions in mm*

| CONNECTIONS | |
|---|---|
| Power | Sealed 2-pin connector, 12 V DC |
| USB | USB socket for the 4G dongle, 15 cm extension |

| AI FEATURES | |
|---|---|
| Microphone | Low-noise omnidirectional, Ø 12 mm in the faceplate |
| Mic processing | Noise reduction, auto level, speech detection |
| Connectivity | 4G dongle (rear USB) or RJ45 port |

| COMPLIANCE | |
|---|---|
| Marking | CE, WEEE · made in France |
| Electrical safety | EN 62368-1:2014 + A11:2017 |
| EMC and radio | EN 55032 class B, EN 61000-6-1/-2, ETSI EN 301 489 |

| MECHANICAL | |
|---|---|
| Dimensions (W × H × D) | 430 × 87.7 × 130 mm |
| Weight | 2.8 kg |
| Faceplate | White Corian, CNC cut |
| Housing | Black vacuum-cast ABS |
| Vibrating pads | 2 × Ø 36 mm, 300 mm apart, 7 pins each |
| Mounting | From below, anti-tear spring clips |

| ENVIRONMENT | |
|---|---|
| Use | Indoor, protected from humidity and dew |
| Operating temperature | −20 °C to +55 °C |
| Fire safety | EN 62368-1 compliant – low-power circuits (PS2), V-1 or better circuit boards |

| ELECTRICAL | |
|---|---|
| Power supply | 12 V DC, 5 A max, from a sealed 60 W mains adapter |
| Mains cable | 5 m, IP67 sealed connectors |
| Electrical class | Class III (SELV 12 V DC); class II mains adapter |
| Protections | Short circuit, overload, overvoltage |
| Power consumption | 40 W max · 6 W average · 3 W standby |

| AUDIO | |
|---|---|
| Principle | Bone conduction, stereo |
| Transducers | 2 × Ø 51 mm exciters, 4 Ω, 10 to 20 W |
| Frequency range | 50 Hz to 5 kHz |
| Audio chain | High-fidelity DAC, stereo class D amplifier |
| Processing | 10-band equaliser, bone-conduction compensation |
| Triggering | 2 pressure sensors, sound plays while pressed |

| COMPUTING | |
|---|---|
| Embedded computer | 64-bit quad-core 1.8 GHz processor, 8 GB RAM, 2.4 / 5 GHz Wi-Fi |
| Storage | microSD 16 GB |
| Audio formats | MP3, WAV, OGG; unlimited number of tracks |
| Network | Built-in Wi-Fi access point |
| Settings | FR / EN web interface: volume, balance, brightness, tracks |
| Updates | Encrypted file, automatic rollback |
| Clock | Real-time clock, coin-cell backup |
| Reliability | 24/7, automatic restart after power loss |

| USER INTERFACE | |
|---|---|
| Display | LED matrix: track number, messages, animations |
| Controls | 2 backlit capacitive touch keys: previous / next |