Losonnante

DATASHEET

Whisper Desk Low Outdoor

Listening desk for the Whisper

Ref. WD-LO · Whisper range

Rev. 1.0 · November 2026

The Whisper Desk Low Outdoor is the desk of the Whisper range, low version, for seated listening. Made of white steel sheet protected by anti-corrosion paint, it can be installed indoors or outdoors. Its sloped top takes a flush-mounted Whisper; it comes with its universal steel base and can also be fixed to the floor.



KEY FEATURES

- 15° sloped top, flush Whisper
- White steel, anti-corrosion paint, indoor and outdoor
- Universal steel base supplied
- Floor fixing possible (fixings not supplied)
- Battery compartment in the leg, lockable hatch

Applications: museums and cultural venues, leisure parks, festivals and events, tourist sites, urban furniture.

DIMENSIONS

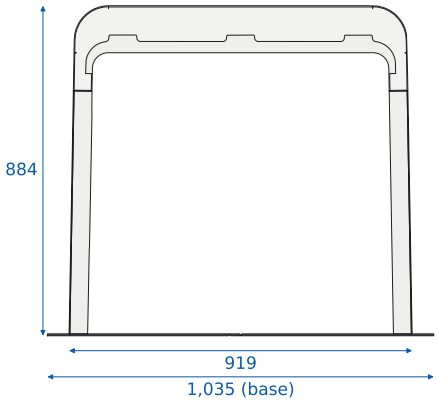

Front view

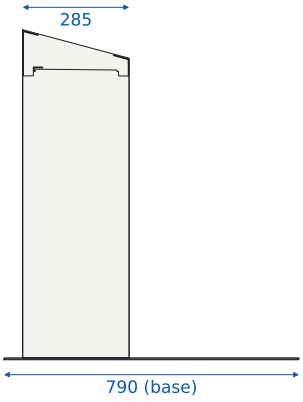

Side view (user on the right)

Dimensions in mm · height incl. base

INTEGRATION	
Whisper	Whisper Outdoor: set on the collar, 414 mm cut-out, flush with the top
Wiring	Fully inside the desk; cable entry through the side hole of the leg (on the base) or the U notch (straight into the floor)

MECHANICAL	
Dimensions (W × D × H)	919 × 285 × 879 mm
Universal base	1,035 × 790 × 5 mm, RAL 7016 textured steel, 2 parts (supplied)
Weight	≈ 31 kg (desk) + 31 kg (base)
Finish	White steel sheet, anti-corrosion paint
Listening surface	Tilted 15° towards the user, Whisper flush; centre 844 mm above the floor
Installation	4 × Ø 10 holes under the legs, aligned with the base: fixing to the supplied base or directly to the floor; fixings not supplied
Battery compartment	Lockable hatch in the leg (battery not supplied)

ENVIRONMENT	
Use	Indoor and outdoor
Protection	Anti-corrosion paint: protects the steel against rust, moisture and oxidation

DELIVERY	
Manufacturing	Made in France
Delivery	Desk sold bare, ready to receive a Whisper; universal base supplied
Packaging	On a pallet: 1 box 40 × 120 × 40 cm, 1 box 40 × 120 × 20 cm and the universal base