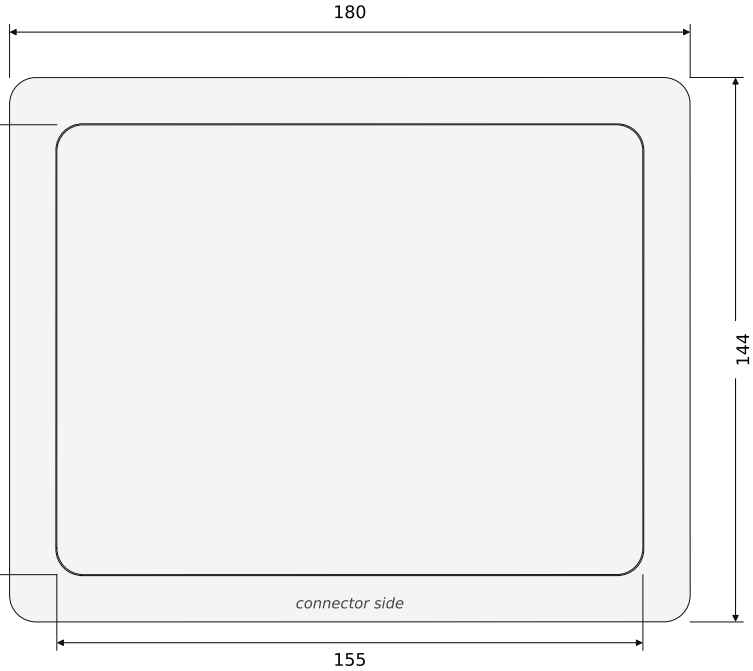

TOP VIEW

Scale 1:2

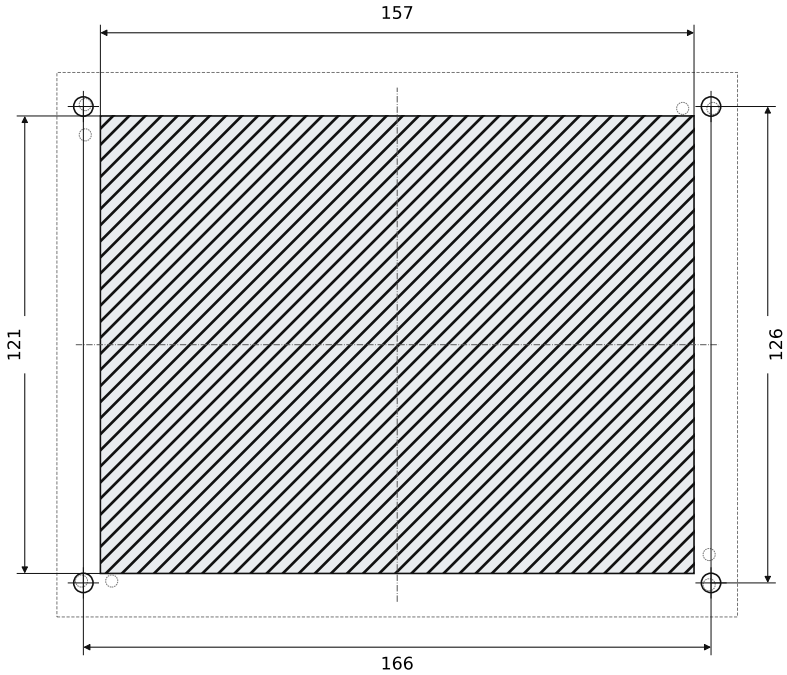

WALL CUT-OUT AND DRILLING

Scale 1:2 · centred on the cut-out axis

- Cut-out 157 × 121 mm (1 mm clearance per side), min. depth 50 mm.
- 4 aligned holes 166 × 126 mm (solid circles), Ø 3 mm pan-head screws.
- Dashed holes: flange holes, 2 per corner, to re-align if drilling is inaccurate.
- Connector side: remove the SP17 cap before fitting (nothing then protrudes from the body) and allow room for the cables (power, IN, OUT L/R).
- The white trim (dashed 180 × 144) clips onto the flange and hides the screws.

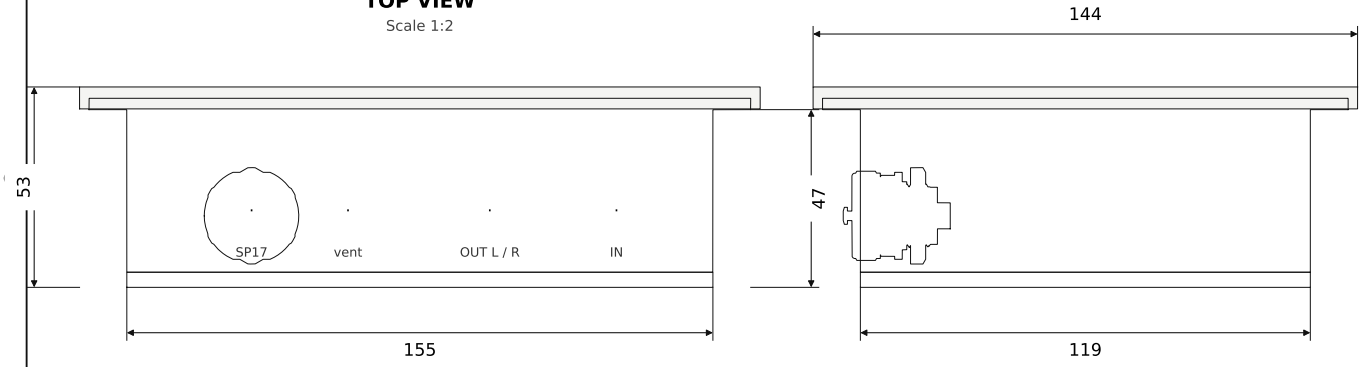

FRONT VIEW (connector side)

Scale 1:2

SIDE VIEW

Scale 1:2



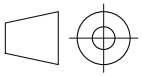

A4 format · dimensions in mm

Material: PLA – black housing, white faceplate and trim	General tolerances: ISO 2768-m		Scale: 1:2	
Title: Vibe Player	Drawn by: Losonnante		Owner: Losonnante	
Document type: Dimensions and installation drawing	Approved by:			
Drawing number: Losonnante VB-PL-001	Language: EN	Date: 24 Nov 2026	Rev.: B	Sheet: 1 / 1