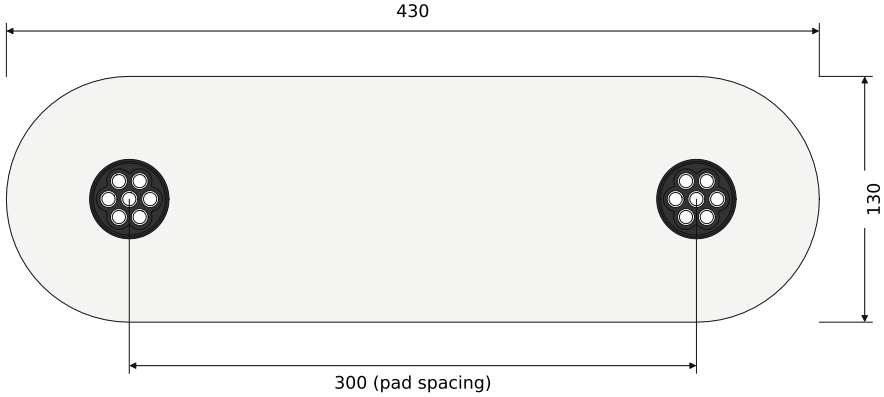


**TOP VIEW**
Scale 1:4

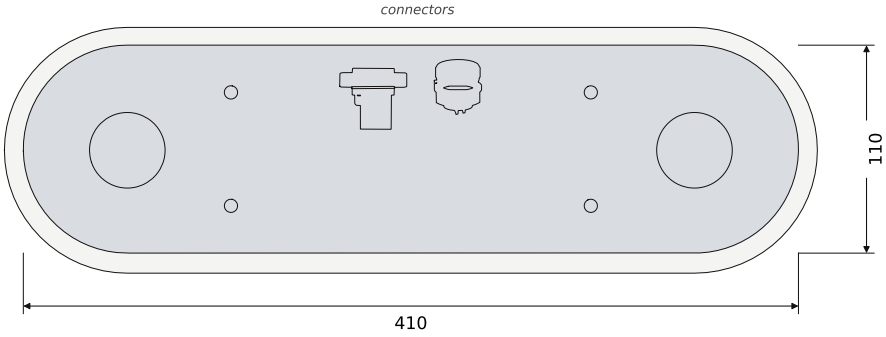


**BOTTOM VIEW**
Scale 1:4

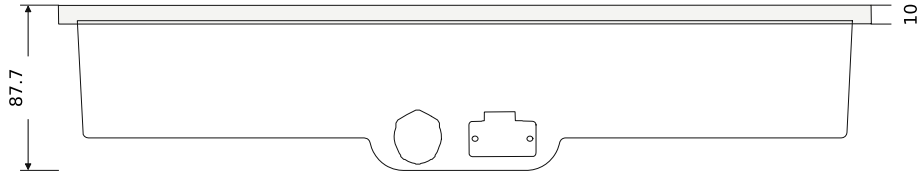


**FRONT VIEW**
Scale 1:4

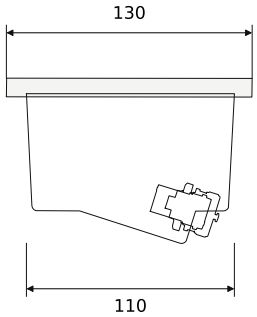


**SIDE VIEW**
Scale 1:4

- Overall dimensions: 430 × 130 × 87.7 mm; 10 mm Corian faceplate.
- Connectors on the rear step of the housing (SP17 power; HDMI, jack or 4G dongle depending on the version).
- Installation: see sheet 2 (board cut-out and mounting clips).



A4 format · dimensions in mm

| | | | | |
|---|---|---|---|---|
| Material: White Corian faceplate, black ABS housing | General tolerances: ISO 2768-m | | Scale: 1:4 | |
| Title: Whisper | Drawn by: Losonnante | | Owner: Losonnante | |
| Document type: Dimensions drawing | Approved by: | | | |
| Drawing number: Losonnante WH-001 | Language: EN | Date: 23 Nov 2026 | Rev.: B | Sheet: 1 / 2 |

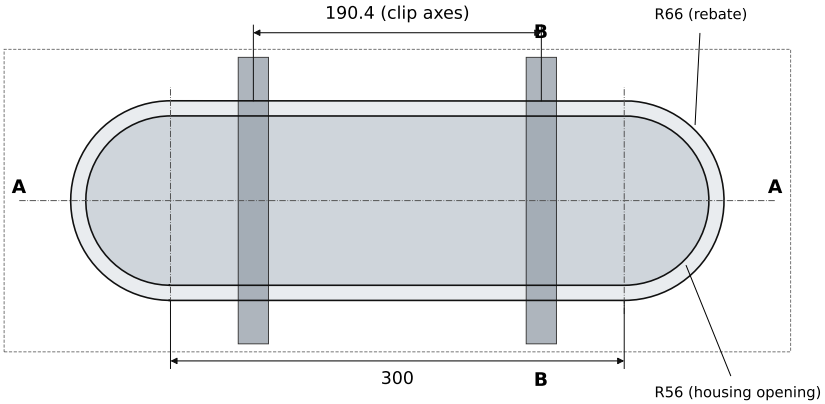


## BOARD CUT-OUT

Scale 1:5 · top view · grey: clip bearing areas

- Two-level cut-out: R66 × 10 mm rebate for the Corian faceplate (flush), R56 opening for the housing; centres 300 mm apart.
- Min. board thickness 20 mm; depth below the faceplate 77.7 mm.
- Mounting: 2 stainless spring clips, each screwed under the housing with an M6 socket head screw (axes at ±95.2 mm from centre). Their feet bear against the underside of the board; they flex to suit its thickness.
- Connector side (housing step): allow room for the power cable and, depending on the version, HDMI, jack or 4G dongle.
- Outdoor installation (Whisper Outdoor): fit the unit in an inclined surface so that water runs off; route the cable downwards; drain the water through holes drilled in the supporting structure below the unit.

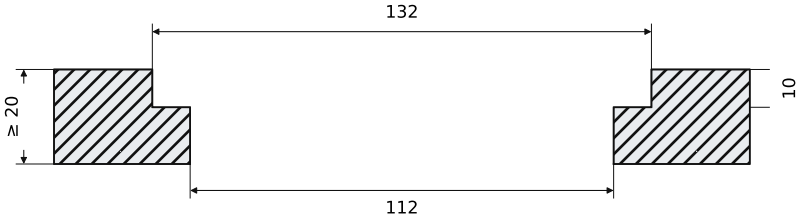


## SECTION A-A

Detail scale 1:2 · board only

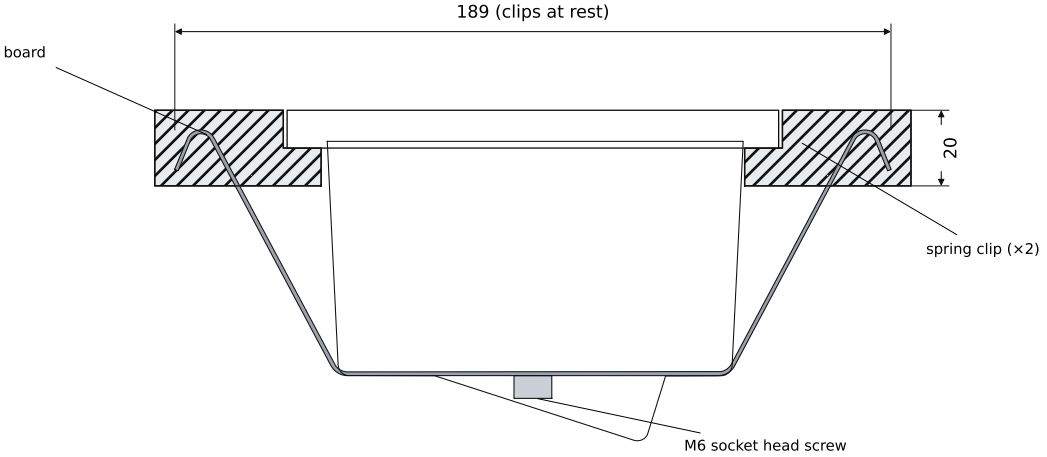


## SECTION B-B

Detail scale 1:2 · product fitted, 20 mm board



A4 format · dimensions in mm

| | | | | |
|---|---|---|---|---|
| Material: Corian faceplate, ABS housing, stainless clips | General tolerances: ISO 2768-m | | Scale: 1:5 (details 1:2) | |
| Title: Whisper | Drawn by: Losonnante | | Owner: Losonnante | |
| Document type: Installation drawing | Approved by: | | | |
| Drawing number: Losonnante WH-001 | Language: EN | Date: 23 Nov 2026 | Rev.: B | Sheet: 2 / 2 |