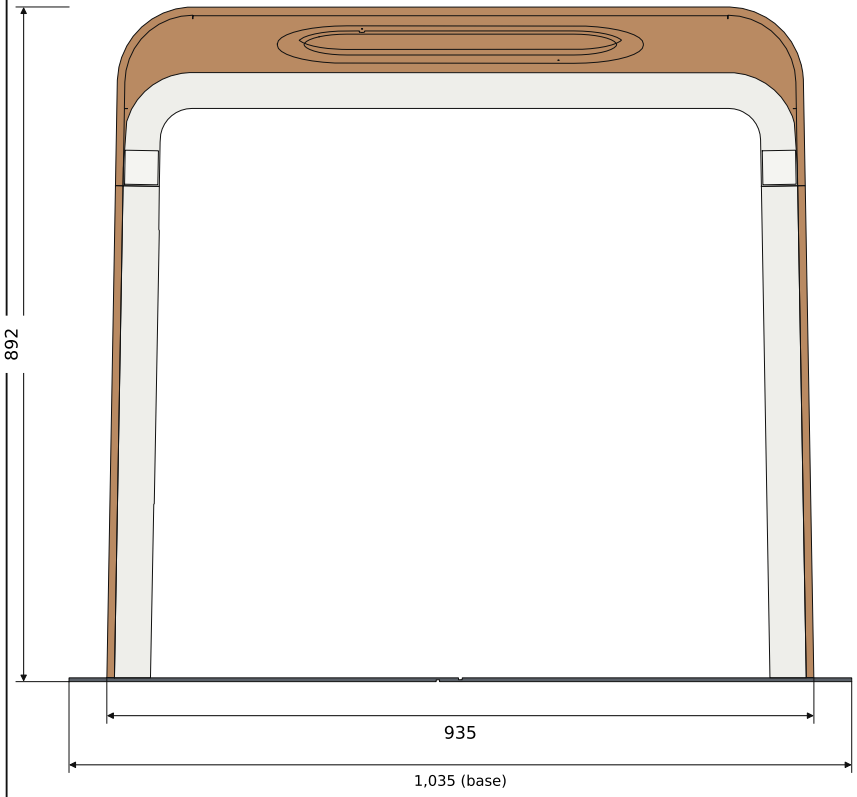

FRONT VIEW

Scale 1:10 · user side



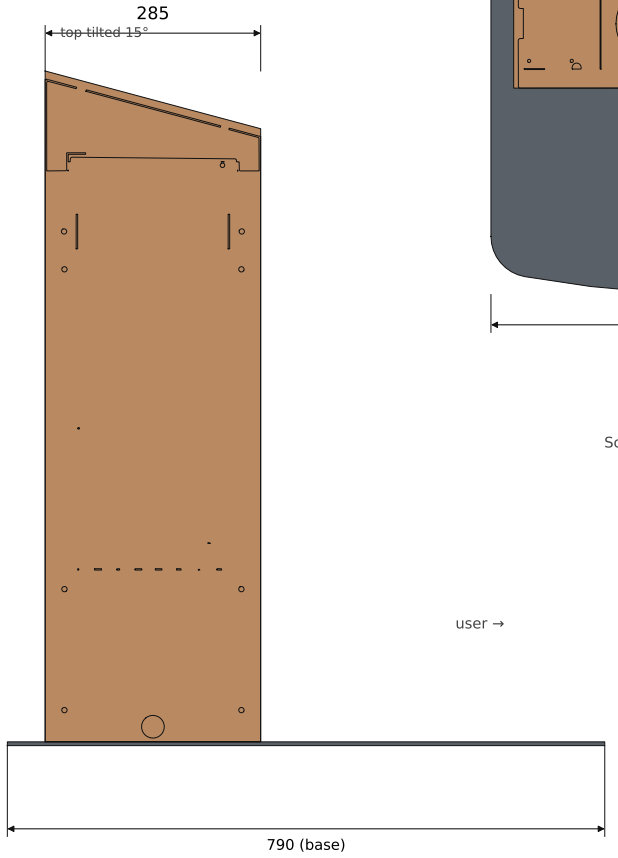

SIDE VIEW

Scale 1:10 · user on the right

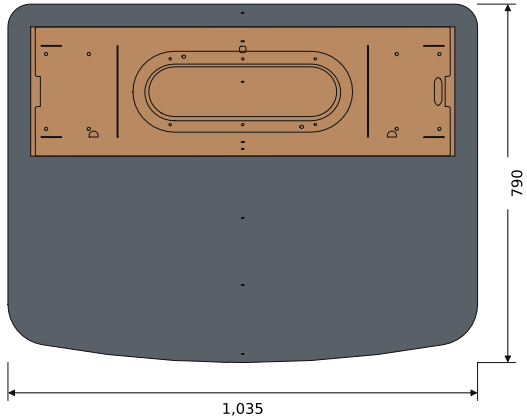

TOP VIEW

Scale 1:16.7 · user at the bottom

A4 format · dimensions in mm

Material: Bent walnut wood, steel structure	General tolerances: ISO 2768-m		Scale: 1 : 10	
Title: Whisper Desk Low Indoor	Drawn by: Losonnante		Owner: Losonnante	
Document type: Dimensions drawing	Approved by:			
Drawing number: Losonnante WD-LI-001	Language: EN	Date: 24 Nov 2026	Rev.: A	Sheet: 1 / 2

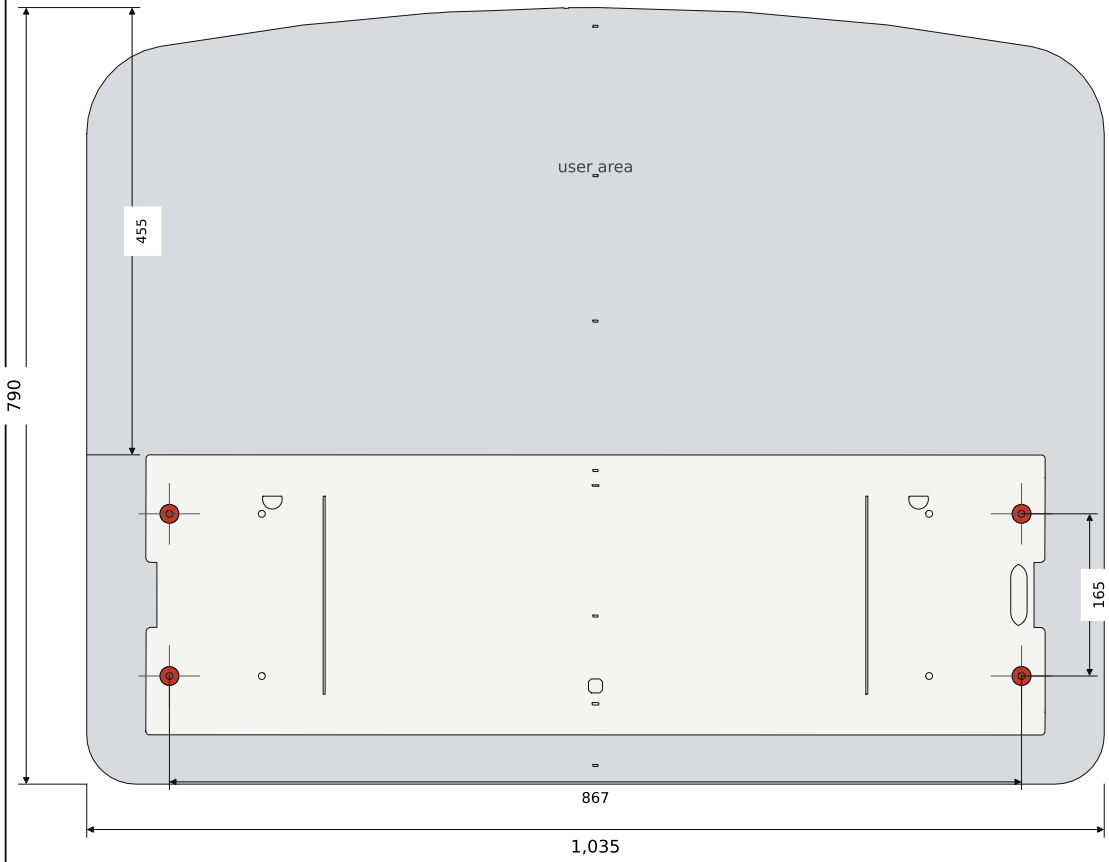

LAYOUT

Scale 1:7.7 · top view, user at the top

Installation and fixing
- The desk comes with its universal steel base (1,035 × 790 × 5 mm, RAL 7016 textured, 2 parts).
- Fixing through 4 × Ø 10 holes under the legs (aligned with the base holes): to the base, or directly to the floor. Studs or screws + anchors not supplied.
- Cable: through the side hole of the leg (on the base) or through the U notch of the leg, straight into the floor.

Equipment
- Desk sold bare, ready to receive a Whisper Indoor: 15° sloped top, 414 mm cut-out, flush Whisper.
- Battery compartment in the leg, lockable hatch (battery not supplied).

Finish
- Bent wood, walnut finish, matt varnish; white inner faces.
- Indoor use.

Delivery
- On a pallet: 1 box 40 × 120 × 40 cm, 1 box 40 × 120 × 20 cm and the universal base.

4 × Ø 10 holes under the legs, aligned with the base holes: fixing to the base or the floor

A4 format · dimensions in mm

Material: Bent walnut wood, steel structure	General tolerances: ISO 2768-m		Scale: 1 : 7.7	
Title: Whisper Desk Low Indoor	Drawn by: Losonnante		Owner: Losonnante	
Document type: Layout and fixing	Approved by:			
Drawing number: Losonnante WD-LI-001	Language: EN	Date: 24 Nov 2026	Rev.: A	Sheet: 2 / 2